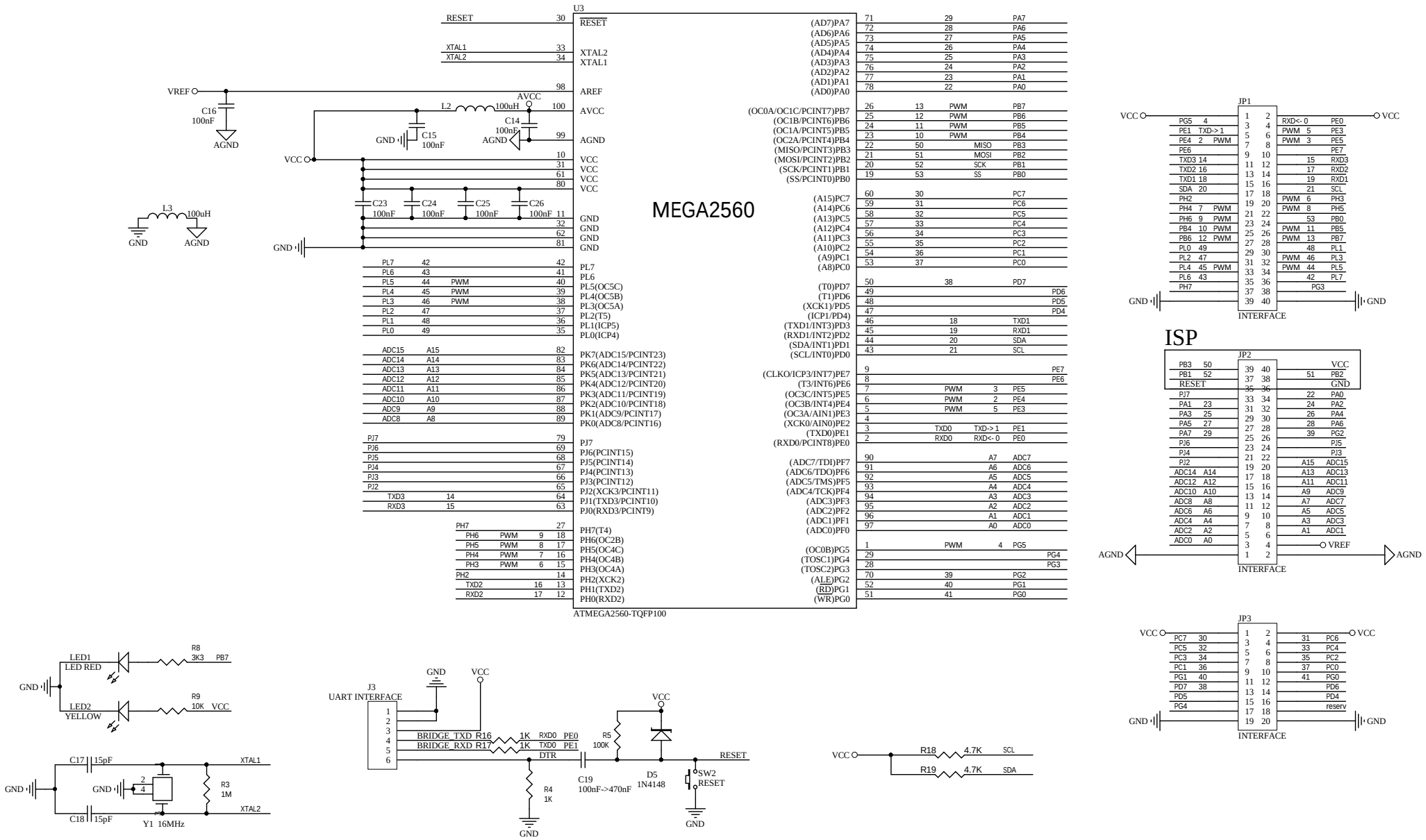

Title		
Size A3	Number	Revision
Date: 2016/6/2	Sheet of	
File: E:\SYNC\..\SCH-TEST-MEGA2560_CORE-V4-20140422.SchDoc	Drawn by:	